Petunia MCX50 Set Configuration

| | | |
|---|---|---|
| Optical System | Plan Infinity corrected optical system | ● |
| Standard Magnification Range | 40x - 1000x | ● |
| Illumination System | Advanced LED<br>Long life LED illumination (30.000 hours) for 110 - 220V, 50 - 60Hz | ● |
| Microscope | Compact size W225/D324/H365, net weight 5.5 kg<br>Sturdy base, 203 x 145 mm | ● |
| | Anti fungus treatment for all optical parts | ● |
| Focusing | Low position, coaxial coarse and calibrated fine focus control, graduation reading 2 µm per division, total focusing range 20 mm | ● |
| Nosepiece | Quadruple reverse angle revolving nosepiece | ● |
| Head | Arctype binocular head 30° inclined, 360° rotatable,<br>interpupillary distance 48-75mm, diopter Adjustment | ● |
| Stage | Double layer specimen stage with right handed mechanical stage<br>(143 x 133 mm), moving range 75 x 30 mm | ● |
| Condenser | Abbé Brightfield condenser, n.A. 1.25, with integrated iris and filter tray<br>Condenser and light intensity adjustable. Frosted filter built in collector | ● |
| Objectives | ICO² Plan 4x/0.10, WD 23.5mm, CC -<br>ICO² Plan 10x/0.25, WD 10mm, CC 0.17<br>ICO² Plan 40x/0.65, WD 0.54mm, spring loaded, CC 0.17<br>ICO² Plan 100x/1.25, WD 0.13mm, oil, spring loaded, CC 0.17 | ●<br>●<br>●<br>● |
| Eyepieces (one pair) | Eyepiece WF 10x/20 Widefield (Ø 23 mm) | ● |
| | | |
| Optional Accessories | | |
| Daylight mirror for outdoor use | | |
| Aluminium transport case | | |
| Eyepiece micrometer (with pointer or reticule) | | |
| Eyepieces P16x/12 (Ø 23mm) | | |
| Trinocular Tube | | |

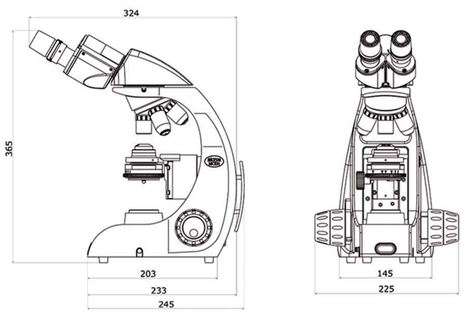


dimensions of carton
40.5 x 29 x 52 cm (LxWxD)

gross weight 7kg

Microscope designs developed by MICROS AUSTRIA. Specifications and equipment are subject to change without any obligation on the part of the manufacturer.

MICROS Austria
Hunnenbrunn-Gewerbezone 5
9300 St. Veit/Glan, AUSTRIA
Tel: 0043 4212/30901
Fax: 0043 4212/30901 90
office@micros.at
www.micros.at

Breitenfurterstr. 38, 1120 Vienna, AUSTRIA

ROYAL MICROSCOPICAL SOCIETY

EUROPEAN CORPORATE MEMBER ASSEMBLY (ECMA)

We are here for you

www.micros.at

EN:ISO 9001 - Petunia MCX50 - Version 09/14

# Petunia MCX50

## Expand your viewing experience

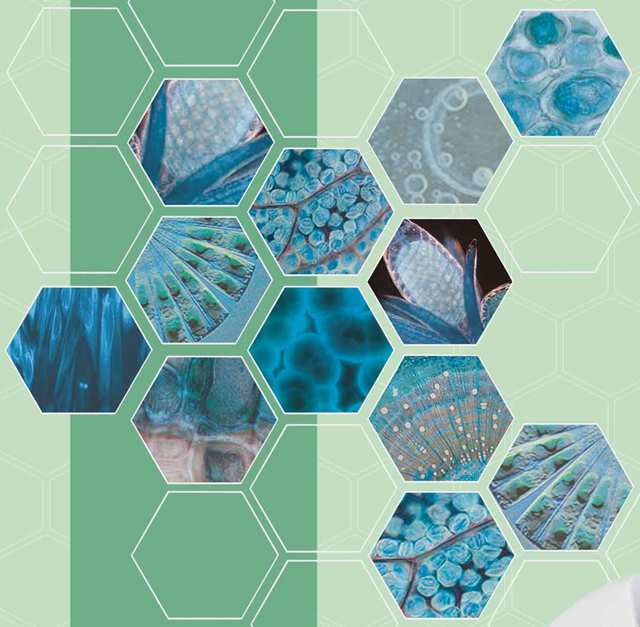

micros
AUSTRIA

micros micros micros micros

# Petunia MCX50

## Expand your viewing experience
## Highly competative with an excellent price/performance ratio

Our reliable biological all-rounder Petunia MCX50 re-enters the market with a substantially upgraded optical system. The brilliant infinity Plan optic offers crystal clear images with incredible sharpness and contrast. Also featured is an advanced and long life LED illumination system. With its premium features, high quality infinity optics, economic LED illumination system and excellent price/performance ratio our Petunia MCX50 is highly competitive in its class.

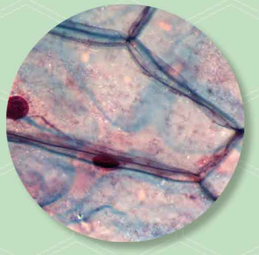

### Brilliant infinity Plan optic - Incredible color and flatness

The infinity Plan optic creates observation results with incredible color and flatness through the whole field of view. The images are bright, crystal clear and offer convincing depth and contrast.

### Advanced LED illumination – Environmentally friendly and energy efficient

The long life LEDs offer a bright and homogenous illumination with a similar to daylight color tone. The high quality and intensity of the light combined with a lot less energy consumption, is the future in premium microscope illumination.

### Ergonomic ARCTYPE observation tube

With the ARCTYPE tube the eyepieces can be positioned in two different heights. The eyepoint adjustment range is 350 – 395 mm, which means small and tall users can have an ergonomic and relaxed posture while observing. The interpupillary distance adjustment (48 – 75 mm) and the diopter adjustment ensure that the microscope easily fits to every user.

### Expand your view with FN20

The eyepieces offer a viewing field of 20x as standard, which improves the sight onto the specimen and offers more observation efficiency.

### Double layer mechanical stage

Big double layer specimen stage (143 x 133 mm) with right-handed mechanical stage. The big stage and the wide moving range 75 x 30 mm ensure a smooth and easy operation.

### Reverse angle nosepiece

The nosepiece is designed for 4 objectives and offers a rear-facing position. This creates much more space on the stage and delivers a perfect sight onto the specimen for much easier handling. The included ring with grooves ensures a good grip for moving the desired objective into the light path.

### Comfortable and safe focusing

The ergonomic arranged coaxial coarse and fine focus controls are located on the left and the right side of the microscope base. Along with the focusing controls, Petunia also features a built in tension adjustment - which controls the mobility of the coaxial coarse - and an Auto Focus Stop Unit Function - which prevents a collision of objective and specimen to avoid possible damage of both. Total focusing range is 20 mm and the graduation reading on the right fine focus is 2 µ per division.

### Anti fungus treatment

Operating the Petunia MCX50 in hot and humid climate does not cause any problems. Due to a special anti fungus treatment of all optical parts, the images remain sharp and clear.

### For measuring or counting specimen

Micrometers are used to measure or count specimens. Optional we offer for our Lotus MCX51 two different eyepiece micrometers:
Reticle with scale on crossline 0.1mm With pointer

### Object Micrometer

The available object micrometer is needed to calibrate the eyepiece micrometer. Object micrometer 1 mm divided into 100 units, 0.01 mm

### Sophiscated observation with trinocular tube and documentation system

Documentation systems are sophisticated solutions that allow microscope users to not only observe and study real-time images through the traditional eyepieces but also see the observation results on a screen. On the optional available trinocular observation tube various documentation systems can be mounted. Choose between digital compact cameras, digital SLR cameras, LIVE cameras with CMOS or CCD sensor or FullHD video cameras.
To Process the observation result, we offer a professional software system equipped with functions for digital photomicrography, image editing, measuring and counting. The software also features advanced exporting and reporting functions.

### Documentation systems

Excellent digital images of finest color grading for sophisticated life science applications. Microscopes with documentation systems are the ideal configurations for observations, presentation or teaching purposes.

### Minimum space requirements

The space-saving construction makes it possible to work in tight spaces where only little space is available. As a solid lightweight our Petunia is easy to transport and store. Optional we offer an aluminium transport case for safe transportation or storage.

### Safety on/off device

The power switch is combined with the brightness adjustment for protecting the eyes. In order to turn the device off, the brightness adjustment has to be on the lowest position. With the safety rotary control device no harm can come to the eyes of too bright light at full power while turning on the microscope.

micros micros micros micros micros micros micros micros